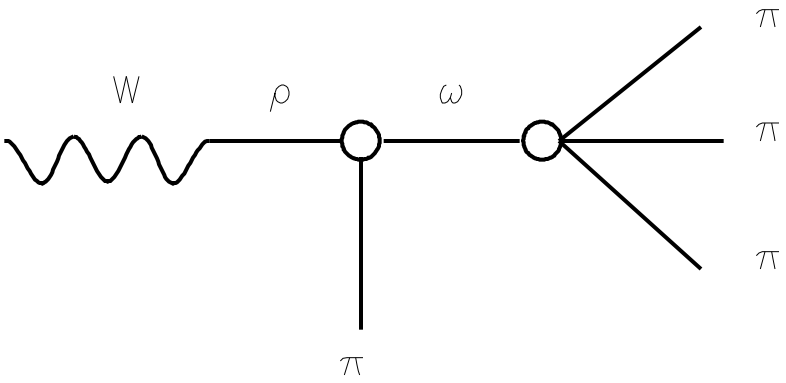
W
ρ
ω
π
π
π
π